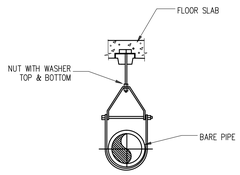

NOTE:

1. CLEVIS HANGERS REQUIRED ON PIPING LARGER THAN 1", GENERAL PURPOSE HANGERS MAY BE USED ON 1" PIPING ONLY.

1 CLEVIS HANGER

NTS

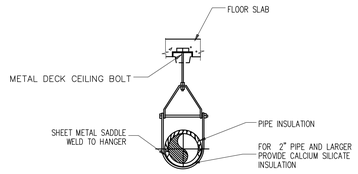

2 CLEVIS HANGER WITH INSULATION SADDLE

NTS

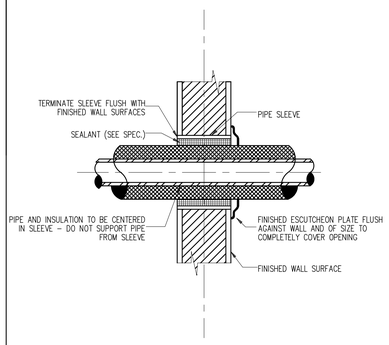

3 PIPE SLEEVE THRU INTERIOR WALL

NTS

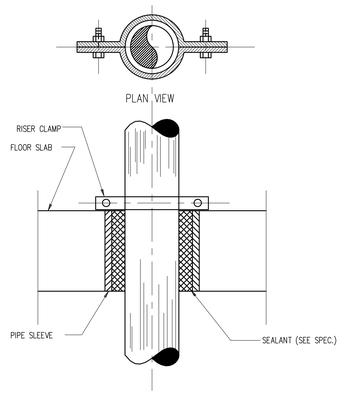

4 PIPE SLEEVE THRU FLOOR SLAB

NTS

MODEL	DIMENSION	A	B	C	D	E	F	G	H
MODEL		DEPTH I.D. (MAX DEPTH OF WASHING MACH.)	DEPTH O.D.	WIDTH I.D. (MAX WIDTH OF WASHING MACH.)	WIDTH O.D. (FRONT EXTERIOR WIDTH)	HEIGHT OF PAN	MINIMUM CLEARANCE FROM REAR WALL TO BACK OF THE WASHING MACHINE	MINIMUM DEPTH OF CLOSET FOR NEW CONSTRUCTION APPLICAITON	MINIMUM WIDTH OF CLOSET FOR NEW CONSTRUCTION APPLICAITONS
WMK2729		27"	28 5/8"	29"	30 5/8"	2 1/2"	3 3/4"	30 3/4"	30 5/8"
WMK2729		28"	31"	30"	33"	2 1/2"	3 3/4"	31 3/4"	33"

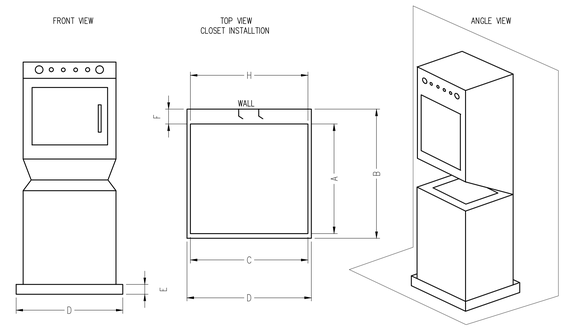

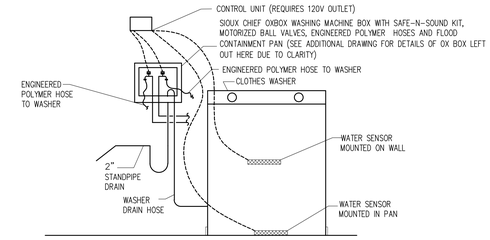

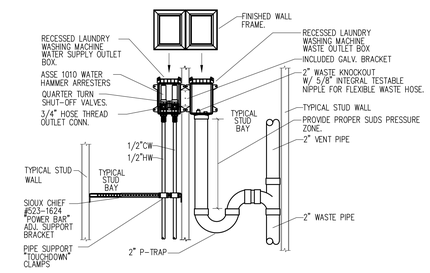

"OX-BOX" #696-2313MF (INCLUDES WATER SUPPLY BOX, WASTE OUTLET BOX, FRAME & RELATED MOUNTING HARDWARE.)
"OX-BOX" RECESSED LAUNDRY WASHER CONNECTION BOX DETAIL

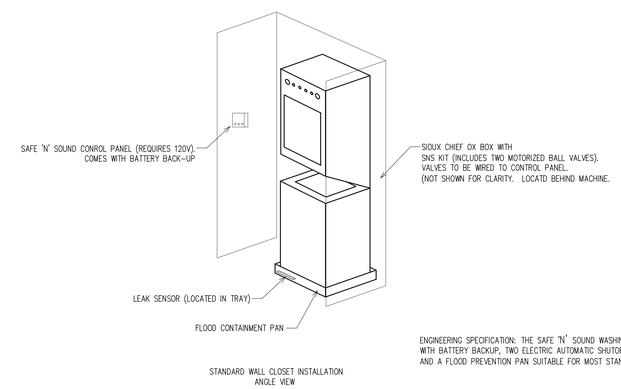

STANDARD WALL CLOSET INSTALLATION ANGLE VIEW

ENGINEERING SPECIFICATION: THE SAFE 'N' SOUND WASHING MACHINE KIT® CONTAINS ONE CONTROL ALARM FEATURING PUSH BUTTON OPEN AND CLOSE OPTIONS WITH BATTERY BACKUP, TWO ELECTRIC AUTOMATIC SHUTOFF BALL VALVES, TWO WATER SENSORS, TWO POLYMER-COATED BRAIDED WASHING MACHINE CONNECTORS, AND A FLOOD PREVENTION PAN SUITABLE FOR MOST STANDARD SIZE WASHING MACHINES, MANUFACTURED BY SAFE 'N' SOUND APPLIANCES INC.,.

5 TYPICAL WASHING MACHINE CONNECTION DETAIL WITH FLOOD PREVENTION SYSTEM

N.T.S.

PROJECT:

HM 78 A-B

ARCHITECT OF RECORD :

S.M. BERGER ARCHITECTURE, P.C.

P.O. BOX 222113
GREAT NECK, NEW YORK 11022 TEL.: 516 . 773 . 7365

EXECUTIVE ARCHITECT :

SLCE ARCHITECTS, LLP

1359 BROADWAY
NEW YORK, NY 10018 TEL.: 212 . 979 . 8400

STRUCTURAL ENGINEER:

WSP CANTOR SEINUK

228 EAST 45TH STREET
NEW YORK, NY 10017 TEL.: 212 . 687 . 9888

M E P ENGINEER:

WSP FLACK + KURTZ

512 SEVENTH AVENUE
NEW YORK, NY 10018 TEL.: 212 . 532 . 9600

CODE CONSULTANT / EXPEDITING:

JEROME S. GILLMAN CONSULTING ARCHITECTS, P.C.

40 WORTH STREET
NEW YORK, NY 10013 TEL.: 212 . 349 . 9304
ZONING CONSULTANT:

No:	Date:	Revision:
	06/09/2017	ISSUED FOR DOB

SCALE:

KEY PLAN:

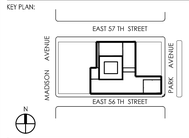

DRAWING TITLE:

PLUMBING DETAILS

SEAL & SIGNATURE:

DATE:
PROJECT No:
DRAWN BY: R.P.
CHECKED BY: L.B.
DRAWING No:

P-600.00

CADD FILE No:
P-600