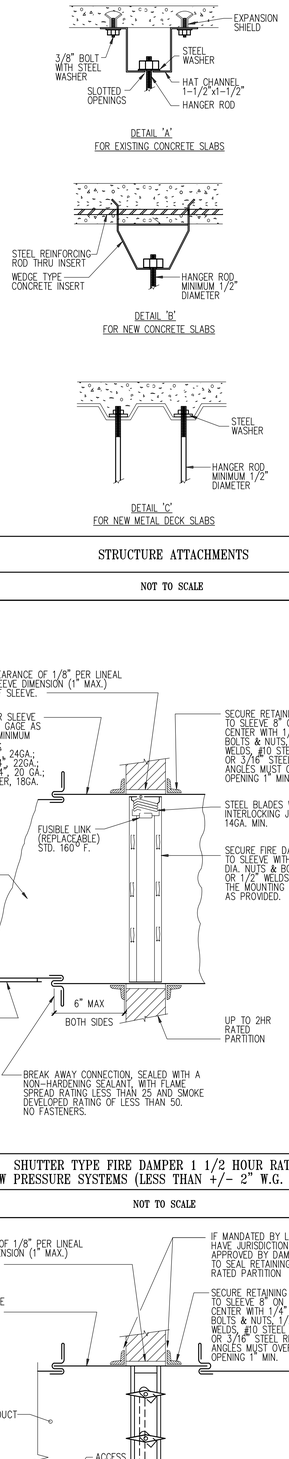

701/1 STRUCTURE ATTACHMENTS

NOT TO SCALE

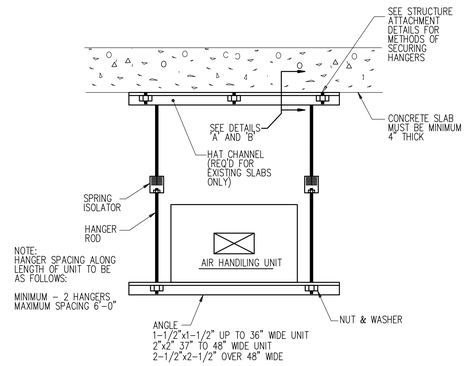

701/2 EQUIPMENT SUSPENDED FROM CONCRETE SLAB

NOT TO SCALE

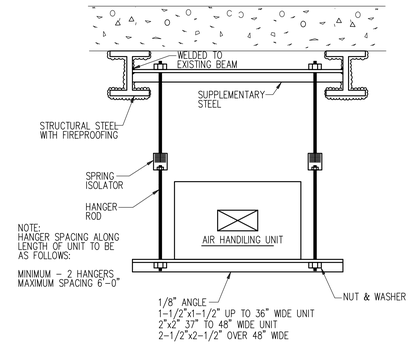

701/3 EQUIPMENT SUSPENDED FROM STRUCTURAL STEEL

NOT TO SCALE

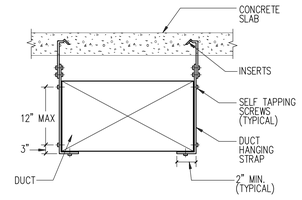

NOTES FOR DUCT HANGING DETAILS

1. DUCT SHALL BE SUSPENDED WITH GALVANIZED BAND IRON STRAPS SECURELY FASTENED TO THE BOTTOM AND SIDE OF THE DUCT. STRAPS TO BE SIZED IN ACCORDANCE WITH SMACNA TABLE 4–1 OR ACCORDING TO LOCAL CODES, WHICHEVER IS MORE STRINGENT.

CROSS SECTIONAL AREA (SQ.FT.)	MAX. HANGER SPACING (FT.)
UP TO 4	8
OVER 4 NOT TO EXCEED 10	6
OVER 10	4

2. DUCTS WIDER THAN 60 INCHES TO BE SUPPORTED BY TRAPEZE ANGLES IN ACCORDANCE WITH SMACNA TABLE 4–3.

701/4 DUCT HANGING DETAIL WITH CONCRETE INSERTS

NOT TO SCALE

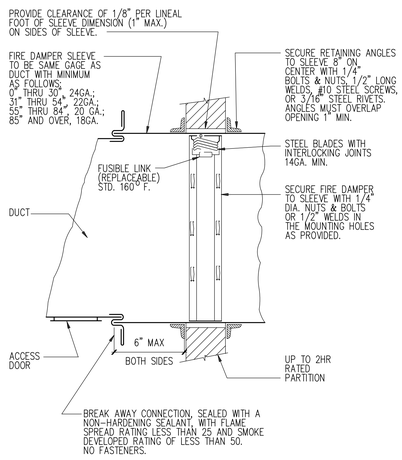

701/5 SHUTTER TYPE FIRE DAMPER 1 1/2 HOUR RATING LOW PRESSURE SYSTEMS (LESS THAN +/– 2" W.G. S.P.) (FD)

NOT TO SCALE

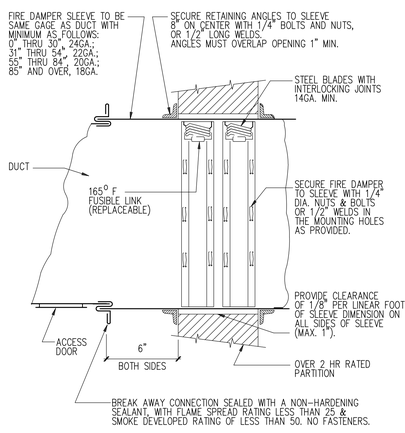

701/6 SHUTTER TYPE FIRE DAMPER 3 HOUR RATING LOW PRESSURE SYSTEMS (LESS THAN +/– 2" W.G. S.P.) (FD-3)

NOT TO SCALE

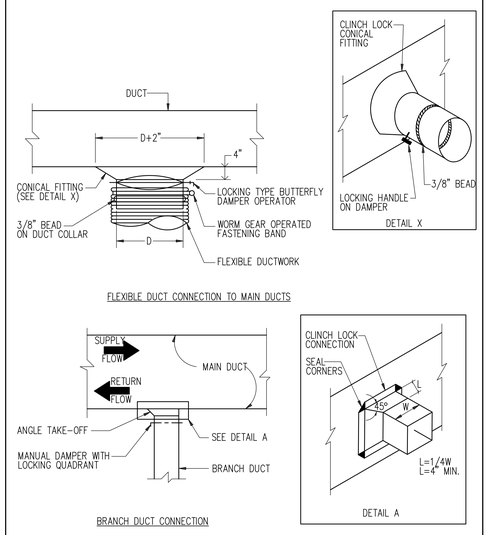

701/7 LOW PRESSURE BRANCH DUCT CONNECTIONS

NOT TO SCALE

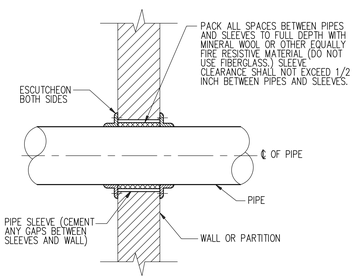

701/8 PIPING PIERCING FIRE RATED PARTITIONS & WALLS

NOT TO SCALE

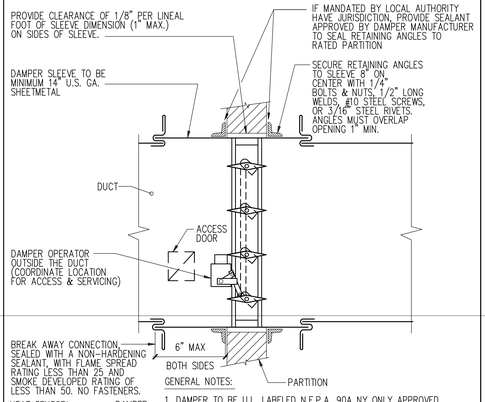

GENERAL NOTES:

1. DAMPER TO BE U.L. LABELED N.F.P.A. 90A NY ONLY APPROVED
2. N.F.P.A. APPROVED INSTALLATION DETAILS TO BE PART OF SUBMISSION OF COMBINATION FIRE & SMOKE DAMPER FOR APPROVAL, WHICH SHALL MEET N.F.P.A. STANDARD 90A NY ONLY APPROVED.
3. DETAILS SHOWN ARE FOR SMOKE DAMPERS IN HORIZONTAL DUCTWORK. FOR DAMPERS IN VERTICAL DUCTWORK, DETAIL IS SIMILAR.
4. INSTALL DAMPER IN ACCORDANCE WITH MANUFACTURERS REQUIREMENTS.
5. FOR APPLICATIONS IN FIRE RATED PARTITIONS WITH HEAT ACTIVATED DAMPERS ARE REQUIRED. REFER TO FIRE AND SMOKE DAMPER DETAILS.

701/9 AUTOMATIC SMOKE DAMPER INSTALLATION–ELECTRIC CONTROL

NOT TO SCALE

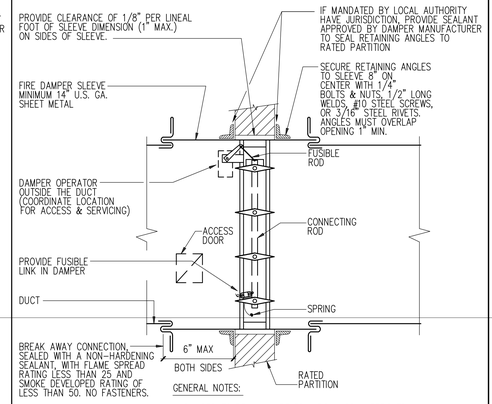

GENERAL NOTES:

1. DAMPER TO BE U.L. LABELED N.F.P.A. 90A APPROVED
2. N.F.P.A. APPROVED INSTALLATION DETAILS TO BE PART OF SUBMISSION OF COMBINATION FIRE & SMOKE DAMPER FOR APPROVAL, WHICH SHALL MEET N.F.P.A. STANDARD 90A
3. DETAILS SHOWN ARE FOR COMBINATION FIRE SMOKE DAMPERS IN HORIZONTAL DUCTWORK. FOR DAMPERS IN VERTICAL DUCTWORK, DETAIL IS SIMILAR.
4. INSTALL DAMPER IN ACCORDANCE WITH MANUFACTURERS REQUIREMENTS.

701/10 COMBINATION FIRE AND SMOKE DAMPER WITH FUSIBLE LINK (FSD & FSD-3)

NOT TO SCALE

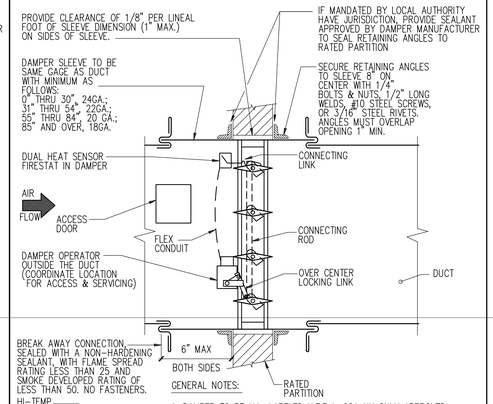

GENERAL NOTES:

1. DAMPER TO BE U.L. LABELED N.F.P.A. 90A NY ONLY APPROVED
2. N.F.P.A. APPROVED INSTALLATION DETAILS TO BE PART OF SUBMISSION OF COMBINATION FIRE & SMOKE DAMPER FOR APPROVAL, WHICH SHALL MEET N.F.P.A. STANDARD 90A NY ONLY APPROVED.
3. DETAILS SHOWN ARE FOR COMBINATION FIRE SMOKE DAMPERS IN HORIZONTAL DUCTWORK. FOR DAMPERS IN VERTICAL DUCTWORK, DETAIL IS SIMILAR.
4. INSTALL DAMPER IN ACCORDANCE WITH MANUFACTURERS REQUIREMENTS.

701/11 DUAL SENSOR OPENABLE COMBINATION FIRE AND SMOKE DAMPER (FSD–HS & FSD–HS3)

NOT TO SCALE

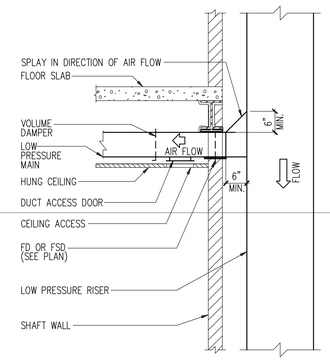

701/12 LOW PRESSURE SUPPLY RISER DUCT CONNECTION (DUCTED RETURN SIMILAR)

NOT TO SCALE

PROJECT:

HM 78 A-B

ARCHITECT OF RECORD:
S.M. BERGER ARCHITECTURE, P.C.
P.O. BOX 222113
GREAT NECK, NEW YORK 11022 TEL.: 516 . 773 . 7365

EXECUTIVE ARCHITECT:
SLCE ARCHITECTS, LLP
1359 BROADWAY
NEW YORK, NY 10018 TEL.: 212 . 979 . 8400

STRUCTURAL ENGINEER:
WSP CANTOR SEINUK
228 EAST 45TH STREET
NEW YORK, NY 10017 TEL.: 212 . 687 . 9888

M.E.P ENGINEER:
WSP FLACK + KURTZ
512 SEVENTH AVENUE
NEW YORK, NY 10018 TEL.: 212 . 532 . 9600

CODE CONSULTANT / EXPEDITING:
JEROME S. GILLMAN CONSULTING ARCHITECTS, P.C.
40 WORTH STREET
NEW YORK, NY 10013 TEL.: 212 . 349 . 9304
ZONING CONSULTANT:

No:	Date:	Revision:
	06/09/2017	ISSUED FOR DOB

SCALE: NTS

KEY PLAN:

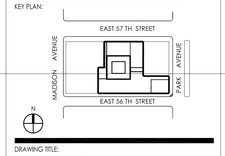

DRAWING TITLE:

MECHANICAL DETAIL SHEET 2

SEAL & SIGNATURE:

DATE:
PROJECT No:
DRAWN BY: DD
CHECKED BY: DD
DRAWING No:

M-701.00

CADD FILE No:
M-701